Clamptek®

PART NUMBER: CH-201-C

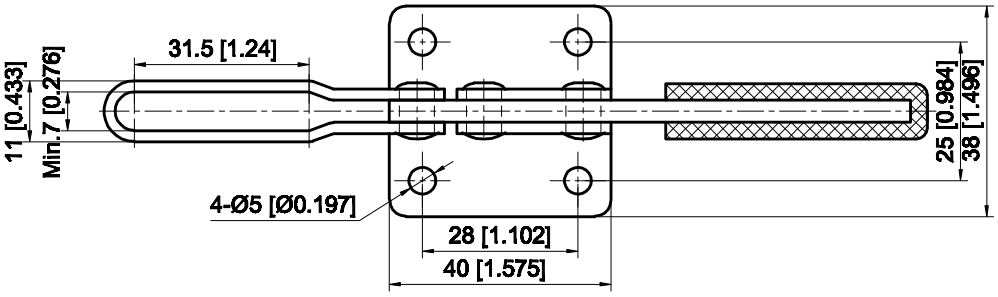

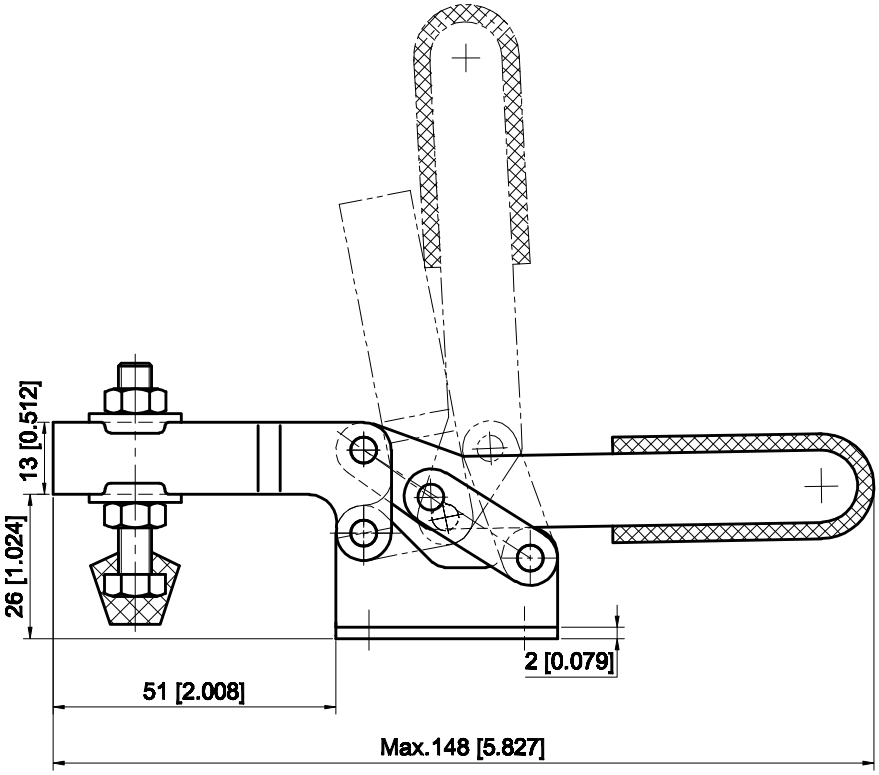

BAR OPENS:79°

HANDLE OPENS:92°

SPINDLE SUPPLIED:CH-FC-14134